CSD208 Computer Architecture - Class Assignment 3

Due Date: 10 pm, March 31, 2020

Submitting this Assignment

You will submit (upload) this assignment on Blackboard. Email submissions will not be accepted.

- Write your answer after the given question in this document.
- Name this document as **CA3_CA2020_John_Doe.pdf** in case your name is John Doe.
- Upload a **pdf version** of the document.

Grading: This assignment has 3 points (with **weightage of 3%** in your overall 100 points)

Answer the following questions:

1. **What are PRAM models and why do we use them in parallel computing?**

   Parallel Computing has taken the world by storm. It has increased our computing capabilities multifold and made many technological marvels possible. One of the contributing factors to parallel computing are the different models that help implement it. One such example is a **Parallel Random Access Machine (PRAM)** which is an abstract model for parallel computation which runs by assuming that all the processors operate synchronously using a single clock and are allowed randomly to access a large memory space which is shared by all the processors. In a PRAM model, multiple processors are attached to a single block of memory. A PRAM models have three assumptions:-

   - All the processors access a large shared memory
   - All the processors are synchronous in nature and use the same clock.
   - Each operation finishes in one clock cycle.

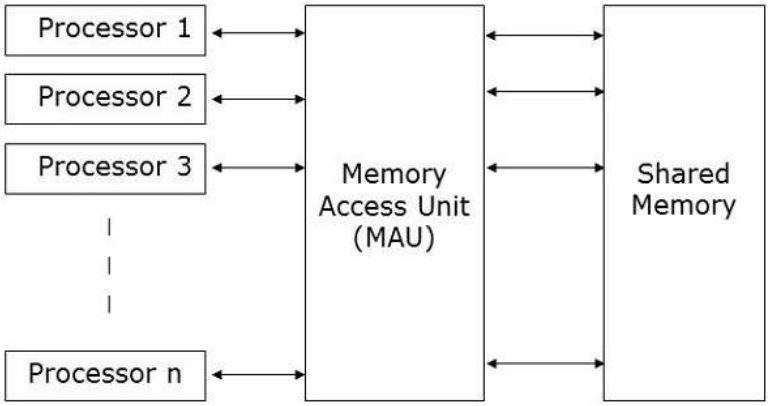

Figure 1: A PRAM model architecture. Source: USTC Education

CSD208 Computer Architecture - Class Assignment 3

Each processor in the PRAM Model has a unique id. A PRAM model contains:-

- A set of similar type of processors.
- All the processors share a common memory unit. Processors can communicate among themselves through the shared memory only.
- A memory access unit (MAU) connects the processors with the single shared memory.

We use it in parallel computing because of its ability to use multiple processors along with a shared memory and because of the way the following models are implemented.
There are multiple ways to implement a PRAM Model but the three most popular ones are:-

a. <u>Shared Memory Model</u>

The concept of shared memory model focusses more on control parallelism rather than on data parallelism. In this model, the memory space is common and shared while multiple processes run on different processors independently. Hence, if there is any change in any memory location, it can be seen by the other processors. To avoid multiple processors from accessing the same memory location concurrently, lock mechanism like semaphore/mutex locks are implemented.

b. <u>Message Passing Model</u>

This is the most common method of parallel programming in distributed memory systems. Here, all the processors have their own local memory unit and they exchange data through a communication network.

c. <u>Data Parallel Model</u>

The major focus of data parallel programming model is on performing operations on a data set simultaneously. The data set is organized into some structure like an array, hypercube, etc. Processors perform operations collectively on the same data structure. Each task is performed on a different partition of the same data structure.

2. Discuss the memory update options in PRAM models.

There are four memory update options possible in PRAM models which specify how read and write in these models will take place:-

a. Exclusive Write (EW): This is a write condition which only lets at most one processor at a time to write into the shared memory location.
b. Exclusive Read (ER): This is a read condition which allows at most one processor to read from the memory location at a time.
c. Concurrent Read (CR): This allows a number of processors to read the same information from the same memory cell in the same cycle.

d. Concurrent Write (CW): This allows simultaneous writes to the same memory location. In order to avoid any conflict or confusion, some policy must be set up to resolve the write conflicts.

3. Describe the four variants of the PRAM model, depending on how the memory reads and writes are handled.

Different combinations of the above options give rise to several variants of the PRAM Models. They mainly differ in how they handle the Concurrent Write conflicts.
The four variants are:-

a. Exclusive Read Exclusive Write (EREW): This variant model does not allow concurrent read and write. This means more than one processors cannot read or write into the same memory location simultaneously.
b. Exclusive Read Concurrent Write (ERCW): This model allows exclusive read or concurrent writes which means at a time only one processor may read information from one memory location but multiple processors can write into the same memory location.
c. Concurrent Read Exclusive Write (CREW): This model allows concurrent read but only exclusive writing. This means that at a time multiple processors can read from the same memory location but only one processor may write into the same memory location. Concurrent write conflicts are avoided by using mutex locks/ semaphores.
d. Concurrent Read Concurrent Write (CRCW): This model allows either concurrent reads or concurrent writes at the same memory location and at the same time. The conflicting writes can be solved using one of the following four policies.

    i. Common — All simultaneous writes store the same value to the hot-spot memory location.
    ii. Arbitrary — any one of the values written may remain; the others are ignored.
    iii. Minimum — the value written by the processor with the minimum index will remain.
    iv. Priority — the values being written are combined using some associative functions, such as summation or maximum.